VDI - B8 Radial inverted, left hand , long - VDI 50

https://www.kfh-hermann.de/shop/product_info.php?products_id=436&XTCsid=n7eemf1jolajl8itk84fees403

Illustration

(https://www.kfh-hermann.de/shop/shop/images/product_images/original_images/bilder_B47-B8.jpg?XTCsid=n7eemf1jolajl8itk84fees403)

Drawing

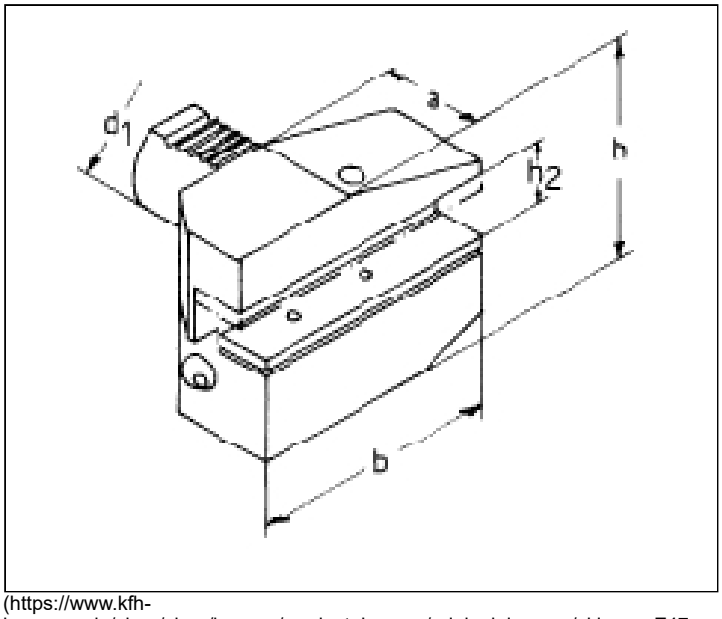

(https://www.kfh-hermann.de/shop/shop/images/product_images/original_images/skizzen_Z47-B8.jpg?XTCsid=n7eemf1jolajl8itk84fees403)

Technical information

Usage:	for clamping of turning chisels
Scope of delivery:	with paddings, clamping screws and stop screws
Customs tarif code:	84 661 03 1

Variants

Product No.	d1	h2	a	h	b	weight in kg	Stock 12.02, 08:14	Net-price
VDI B8 50x32x55	50	32	55	110	130	5,8	3	**Please start an inquiry**

Stock data from 2024-02-12 08:14:41

Kontakt

KARL HERMANN GmbH | Varnbülerstrasse 10 - 12 | D - 71229 Leonberg | | Tel.: +49 (0)7152 / 93992-0 | Fax: +49 (0)7152 / 93992-4 | E-Mail: verkauf@kfh-hermann.de | Internet: http://www.kfh-hermann.de

2024-02-13 12:04:41, https://www.kfh-hermann.de/shop/product_info.php?products_id=436&XTCsid=n7eemf1jolajl8itk84fees403