MAS-BT - End Mill Holder WELDON - BT30

https://www.kfh-hermann.de/shop/product_info.php?products_id=147&XTCsid=n7eemf1jolajl8itk84fees403

Illustration

(https://www.kfh-hermann.de/shop/shop/images/product_images/original_images/bilder_B420.jpg?XTCsid=n7eemf1jolajl8itk84fees403)

Drawing

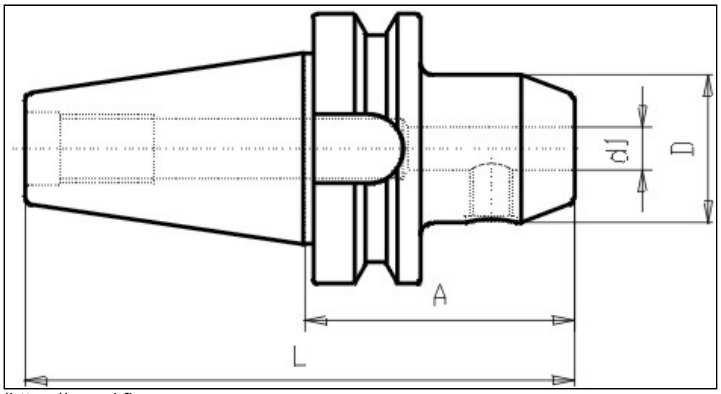

(https://www.kfh-hermann.de/shop/shop/images/product_images/original_images/skizzen_Z420mb.jp XTCsid=n7eemf1jolajl8itk84fees403)

Technical information

Usage:	For milling-tools with zylindrical shaft type Weldon DIN 1835 Form B. Suitable for central coolant flow
Scope of delivery:	with 1 clamping screw, from Dia 25mm with 2 screws
Accuracy:	Runout 15µm max. a 3 x d. Due to the eccentric grinding of the bores, the run-out can only be checked by inserting a qualified tool blank. Do NOT measure bore ! (see technical information)
Customs tarif code:	84 661 02 0
Coolant supply:	Central
Balanced:	G6,3 15.000 rpm

Variants

Product No.	BT	d1	A	Form	L	D	weight in kg	Stock 12.02, 08:14	Net-price
G420 30x 6x 50	30	6	50	AD	98	25	0,5	31	**Please start an inquiry**
G420 30x 8x 50	30	8	50	AD	98	28	0,55	on inquiry	**Please start an inquiry**
G420 30x10x 50	30	10	50	AD	98	35	0,7	9	**Please start an inquiry**
G420 30x12x 50	30	12	50	AD	98	42	--	on inquiry	**Please start an inquiry**
G420 30x14x 50	30	14	50	AD	98	42	0,65	on inquiry	**Please start an inquiry**
G420 30x16x 63	30	16	63	AD	111	48	0,85	44	**Please start an inquiry**
G420 30x16x100	30	16	100	AD	148	48	--	9	**Please start an inquiry**
G420 30x20x 63	30	20	63	AD	111	52	0,9	6	**Please start an inquiry**
G420 30x20x100	30	20	100	AD	148	52	--	6	**Please start an inquiry**

Stock data from 2024-02-12 08:14:41

Kontakt

KARL HERMANN GmbH | Varnbülerstrasse 10 - 12 | D - 71229 Leonberg | | Tel.: +49 (0)7152 / 93992-0 | Fax: +49 (0)7152 / 93992-4 | E-Mail: verkauf@kfh-hermann.de | Internet: http://www.kfh-hermann.de

2024-02-13 11:15:25, https://www.kfh-hermann.de/shop/product_info.php?products_id=147&XTCsid=n7eemf1jolajl8itk84fees403