TRM 50/63 - TRM 63/63
Ø 2.5 ~ 125

2 µm

TRM 50/80 - TRM 80/80
Ø 2.5 ~ 220

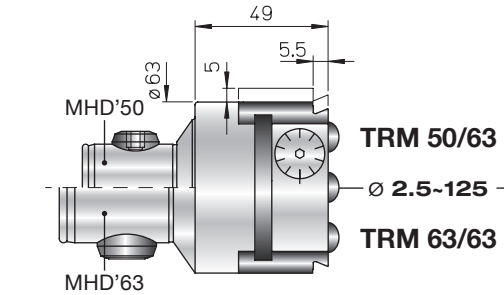

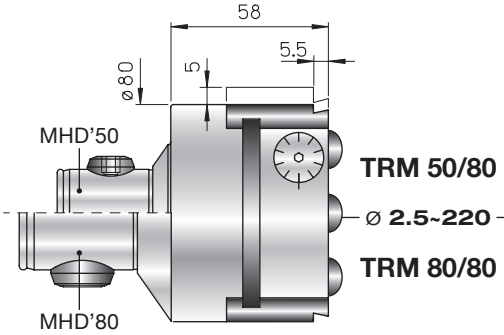

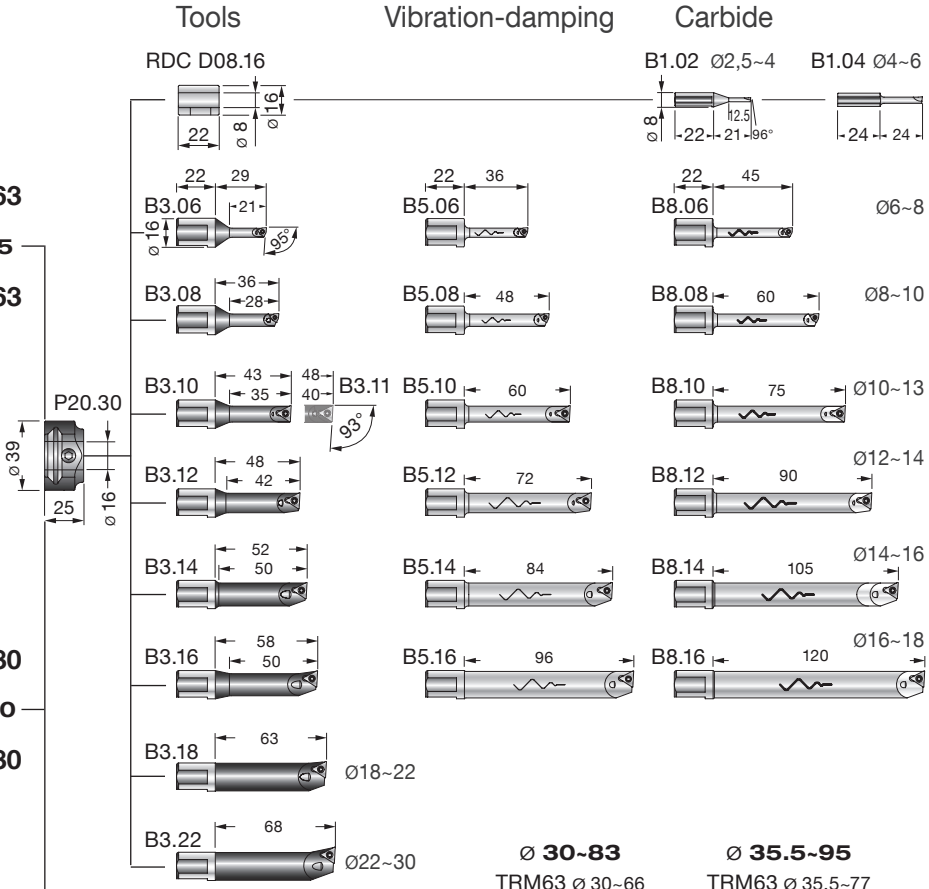
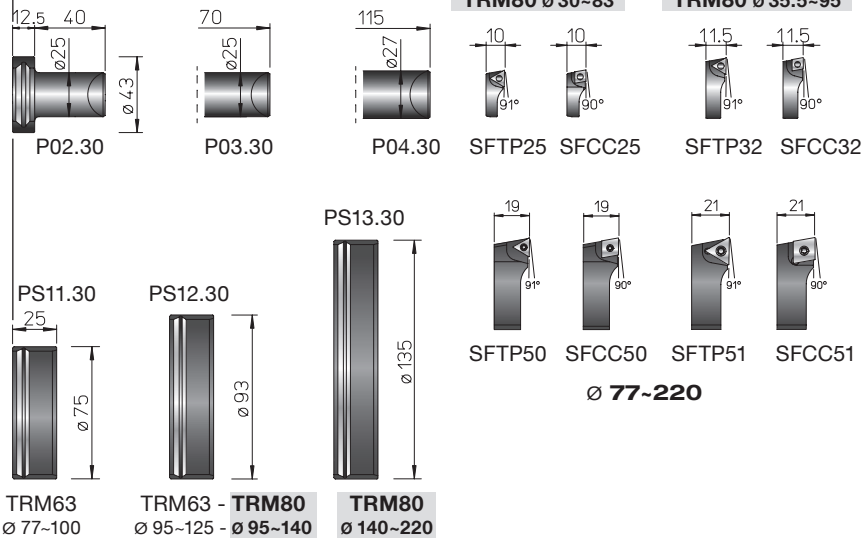
REF.	CODE	kg
TRM 50/63	455005000631	1.1
TRM 63/63	455006300631	1.5
TRM 50/80	455005000801	2
TRM 80/80	455008000801	2.5
D08.16	200560116082	0.02
P20.30	431030160300	0.2
P02.30	431030250400	0.3
P03.30	431030250700	0.4
P04.30	431030251150	0.7
PS 11.30	433030260750	0.4
PS 12.30	433030260950	0.5
PS 13.30	433030261400	0.7